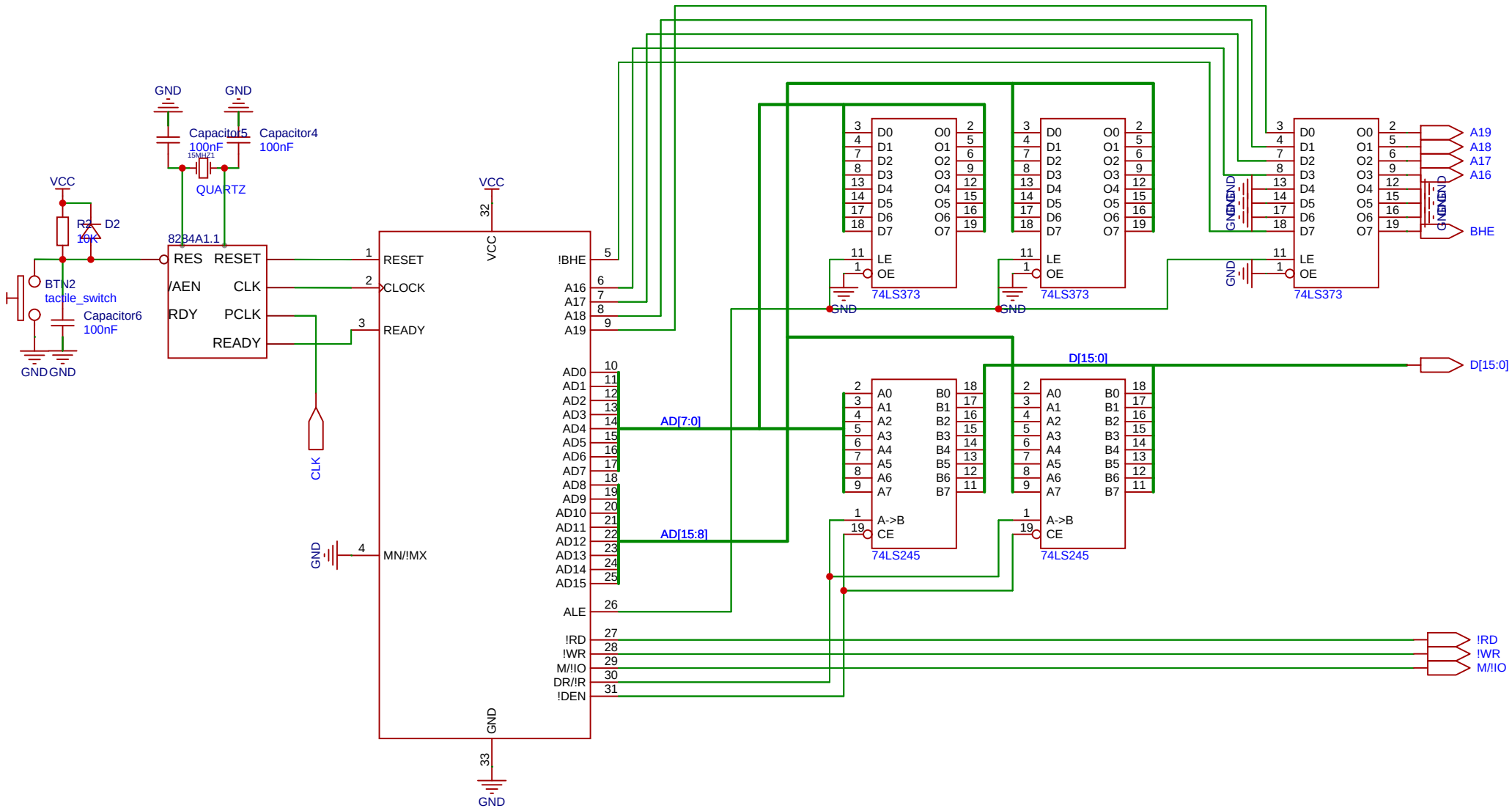

Schematic	8086	Create at	2025-11-12
		Update at	2025-12-15
Board	8086 Microchip System	Page	Central Unit
Drawn	Hondola Paul	8086	
Reviewed			
		Version	Size	Page 1 Total 4
EasyEDA		V1.0	A4	EasyEDA.com

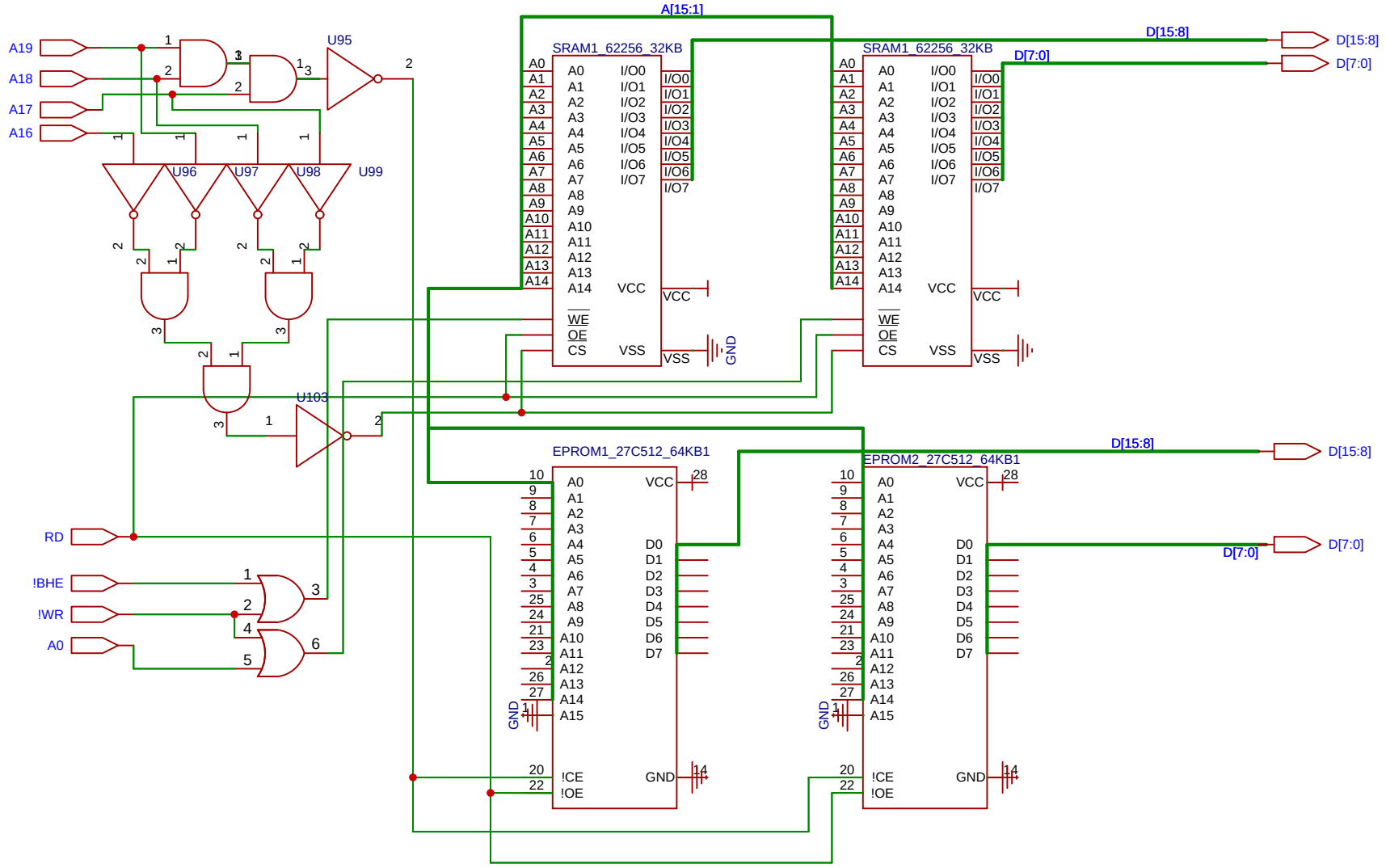

Schematic	8086	Create at	2025-11-12
		Update at	2025-12-15
Board	8086 Microchip System	Page	Memory
Drawn	Hondola Paul	8086	
Reviewed			
		Version	Size	Page 2 Total 4
EasyEDA		V1.0	A4	EasyEDA.com

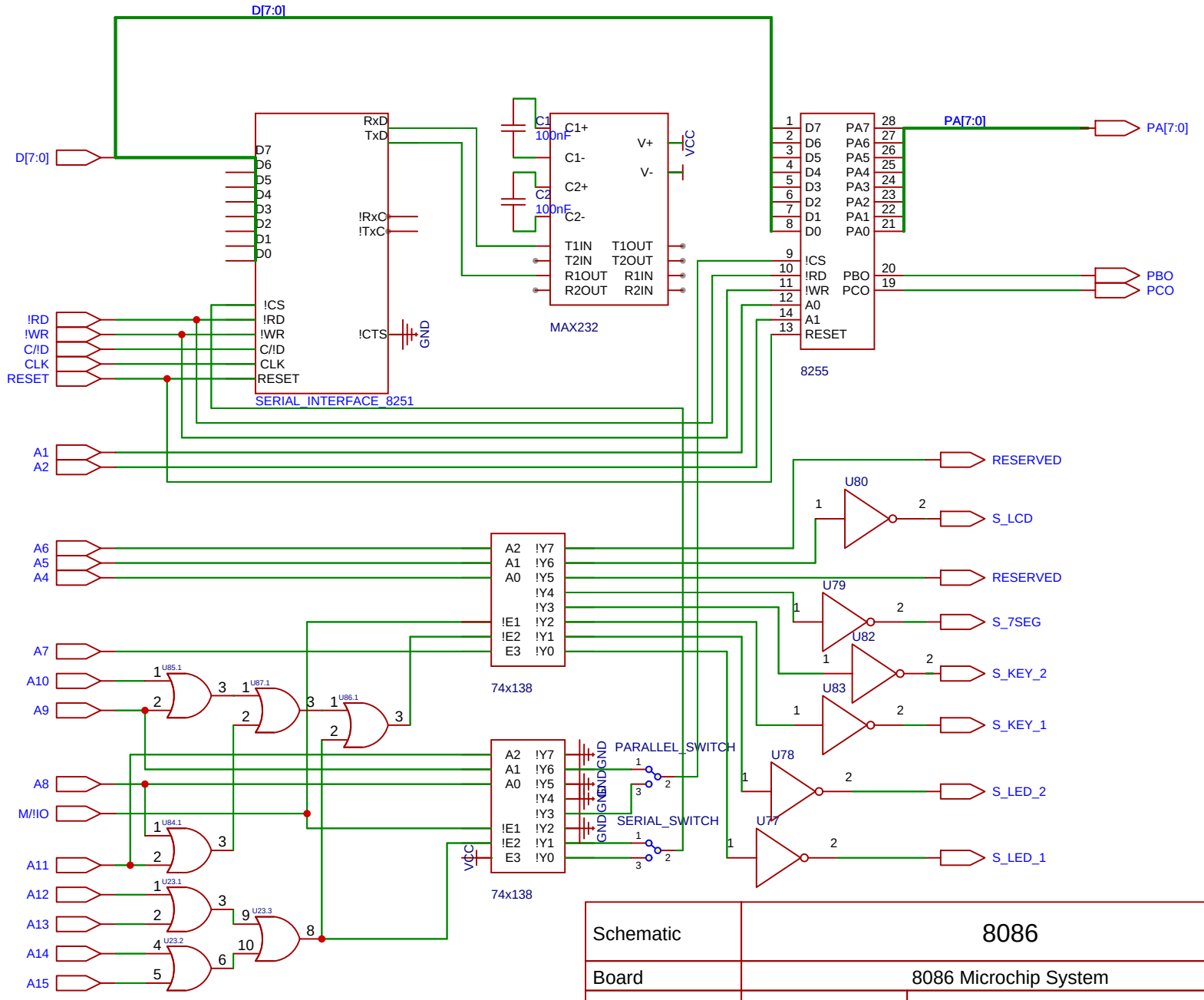

Schematic	8086	Create at	2025-11-12
		Update at	2025-12-15
Board	8086 Microchip System	Page	Interfaces
Drawn	Hondola Paul	8086	
Reviewed			
		Version	Size	Page 3 Total 4
EasyEDA		V1.0	A4	EasyEDA.com

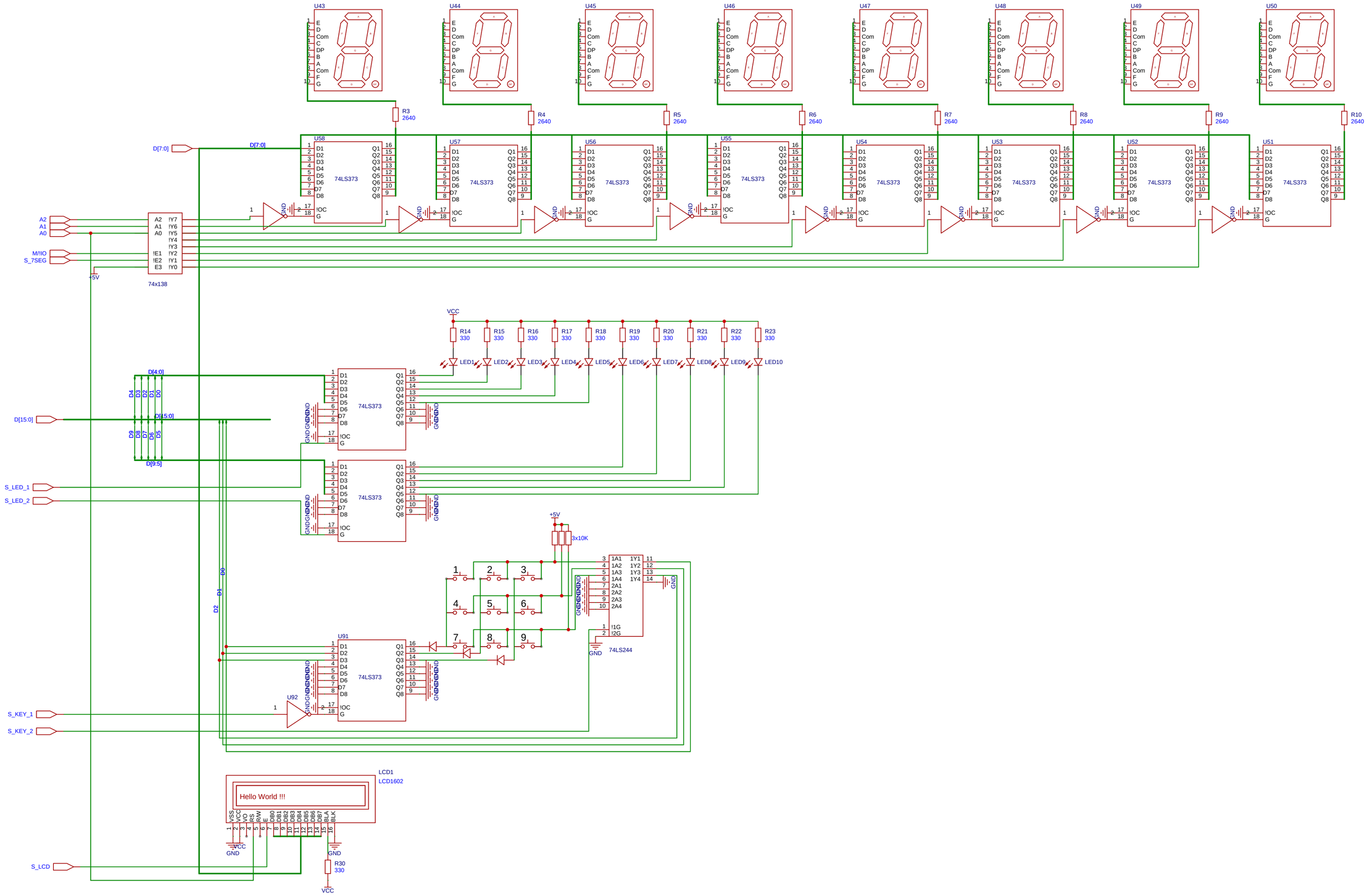

Schematic	8086	Create at	2025-11-12
		Update at	2025-12-15
Board	8086 Microchip System	Page	Peripherals
Drawn	Hondola Paul	8086	
Reviewed			
		Version	Size	Page 4 Total 4
EasyEDA		V1.0	A4	EasyEDA.com